DBASIX

28 OD Pipe Castor Wheel 脚轮

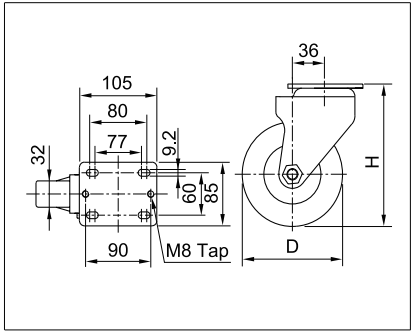

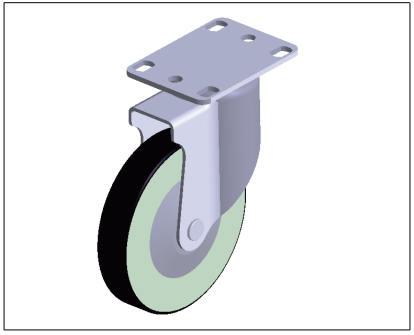

Part No 型号	Description 内容	D × H MM	Load Capacity 极限载荷 / KG	Type 类型	Weight 重量 / KG	Wheel Material 脚轮材质
003.0002.011.01	BPR-100S	100 × 133	100	Plate Type / Swivel	0.94	Rubber
003.0002.011.02	BPU-100S	100 × 133	100	Plate Type / Swivel	0.78	PU
003.0002.011.03	BPRE-100S	100 × 133	100	Plate Type / Swivel	0.87	Rubber - ESD
003.0002.012.01	BPR-125S	125 × 158	100	Plate Type / Swivel	1.13	Rubber
003.0002.012.02	BPU-125S	125 × 158	100	Plate Type / Swivel	0.88	PU
003.0002.012.03	BPRE-125S	125 × 158	100	Plate Type / Swivel	1.03	Rubber - ESD